Module 3

Configuring Interfaces and Switches

Copyright © 2024 The Computing Technology Industry Association, Inc. All rights reserved.

Learning Objectives

- Deploy networking devices.
- Explain network interfaces.
- Deploy common Ethernet switching features.
- Troubleshoot transceiver switching issues.

Copyright © 2024 The Computing Technology Industry Association, Inc. All rights reserved.

Lesson 3.1

Network Interfaces

Copyright © 2024 The Computing Technology Industry Association, Inc. All rights reserved.

Think About It: Network Interfaces

- What is a network interface?

Copyright © 2024 The Computing Technology Industry Association, Inc. All rights reserved.

Network Interface Cards

A network interface card (NIC):

- Transceiver component
- Connects the host to a transmission medium (wired or wireless)
- Can have multiple ports on same card
- Has a unique MAC address
- Operates at the Data Link layer

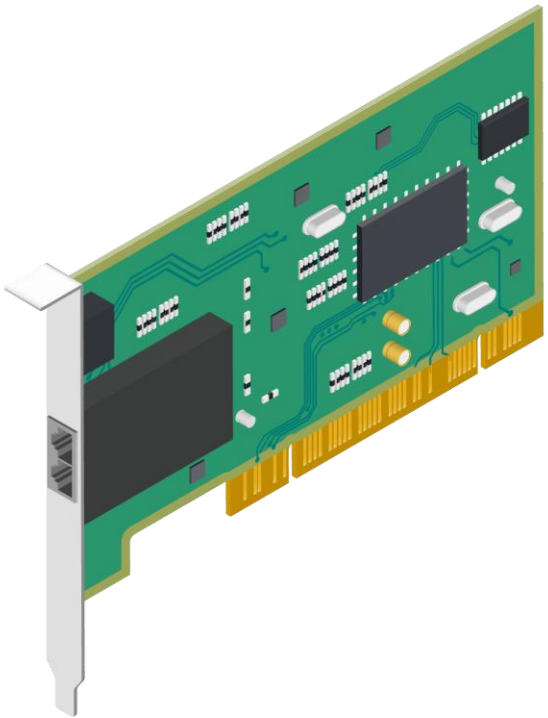

Copyright © 2024 The Computing Technology Industry Association, Inc. All rights reserved.

Symptoms of NIC Issues

Common symptoms of NIC issues include:

- Network connectivity failure
- Slow network speeds
- Intermittent connectivity
- Device manager error messages
- Network setting error messages

Copyright © 2024 The Computing Technology Industry Association, Inc. All rights reserved.

Modular Transceivers

Modular transceivers

- Terminate multiple types of cable and connector types
- Operate at the Data Link layer

Copyright © 2024 The Computing Technology Industry Association, Inc. All rights reserved.

Symptoms of Transceiver Issues

Mismatched ports

- No link
- Intermittent connection loss

Signal strength

- Intermittent connections
- Packet loss
- Poor network performance

Copyright © 2024 The Computing Technology Industry Association, Inc. All rights reserved.

Ethernet Frame Format

Preamble	SFD	Destination MAC	Source MAC	Ether Type	Payload	FCS
Synchronization sequence	Signals the start of the frame	Address of the recipient device	Address of the sending device	Protocol of the payload	Data being transmitted	Error-checking code

Copyright © 2024 The Computing Technology Industry Association, Inc. All rights reserved.

MAC Address Format

Organizationally unique identifier (OUI)

Device ID (based on device model and manufactured date)

2D:45:19:87:C8:E2

48-bit alphanumeric identifier; pairs of hexadecimal digits separated by colons or hyphens

Copyright © 2024 The Computing Technology Industry Association, Inc. All rights reserved.

MAC Broadcast Address

Preamble	SFD	Destination MAC	Source MAC	Ether Type	Payload	FCS
Synchronization sequence	Signals the start of the frame	Address of the recipient device	Address of the sending device	Protocol of the payload	Data being transmitted	Error-checking code

Broadcast Address
11:11:11:11:11:11

If MAC address is all 1s, all hosts on that network will receive and process the packet

Copyright © 2024 The Computing Technology Industry Association, Inc. All rights reserved.

Lesson 3.2

Ethernet Switches

Copyright © 2024 The Computing Technology Industry Association, Inc. All rights reserved.

Hubs

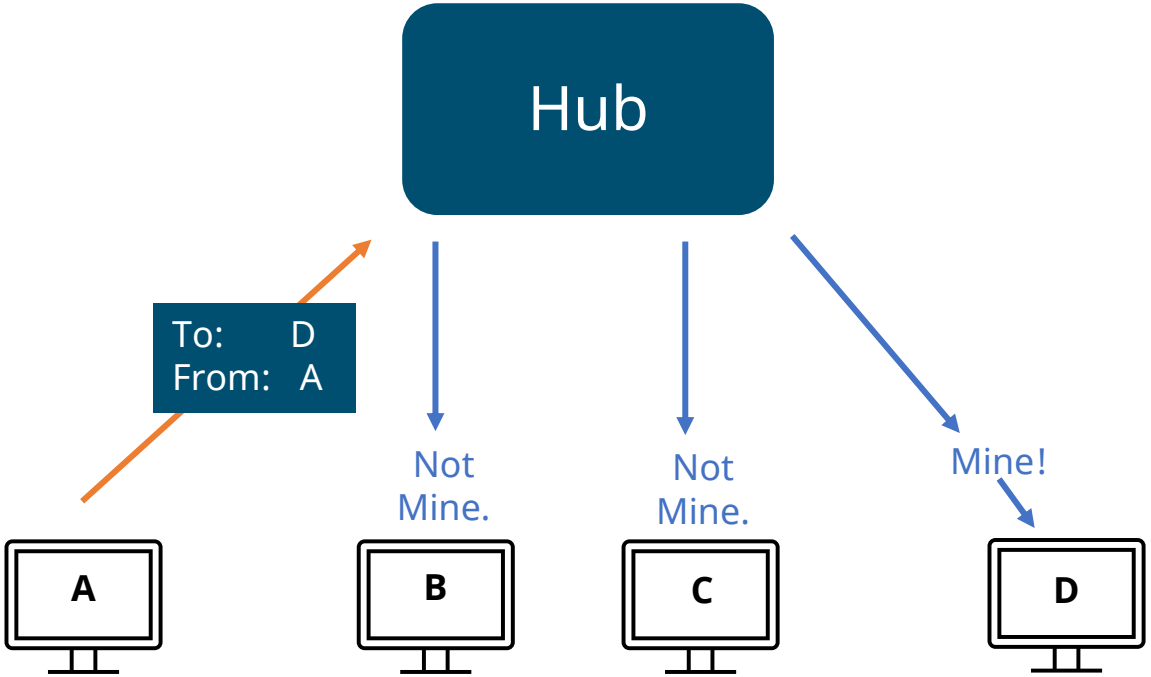

Hubs send transmissions from one port to every other port.

Copyright © 2024 The Computing Technology Industry Association, Inc. All rights reserved.

Bridges

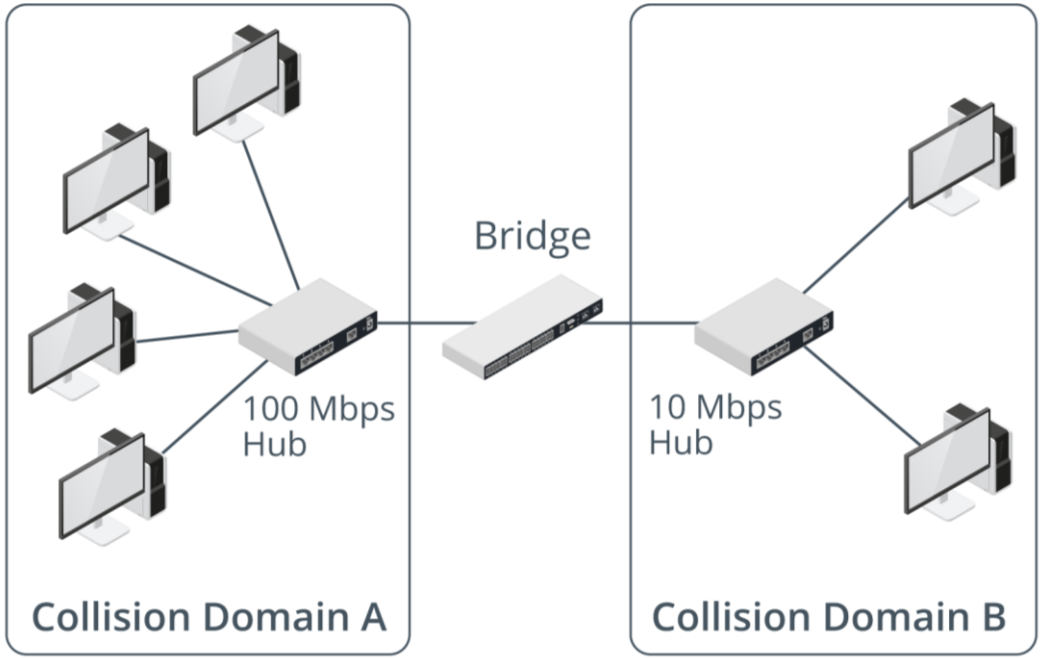

Bridges separate physical network segments while keeping all nodes in the same logical network.

Copyright © 2024 The Computing Technology Industry Association, Inc. All rights reserved.

Switches

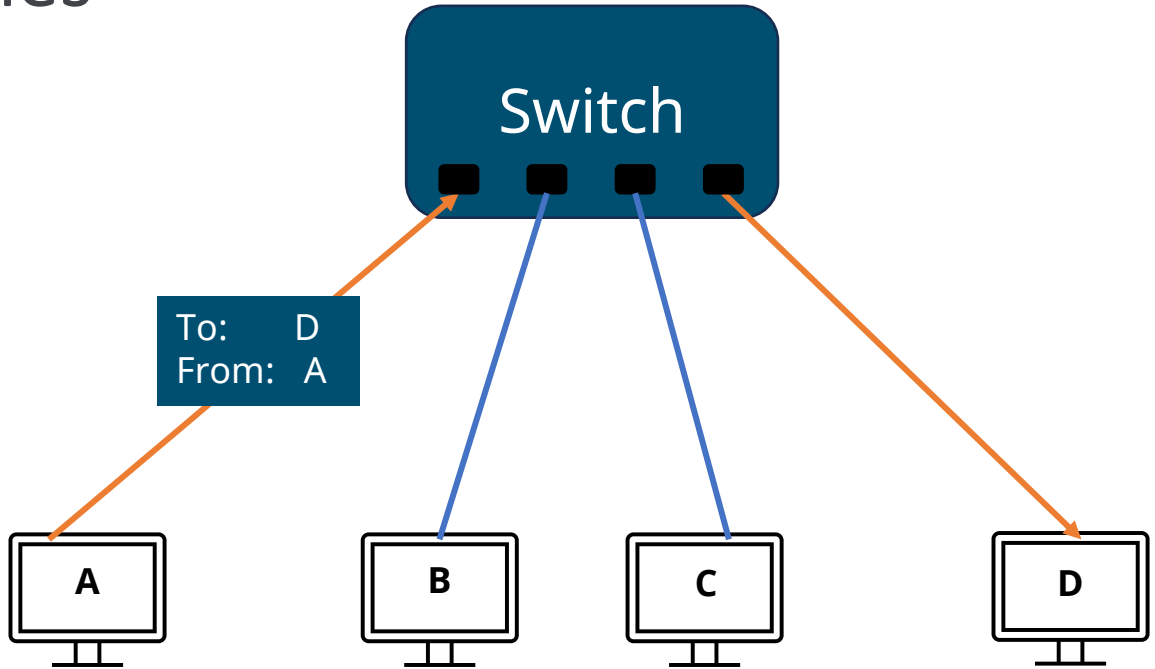

A switch sends transmissions from one port only to the destination port.

Copyright © 2024 The Computing Technology Industry Association, Inc. All rights reserved.

Ethernet Switch Types

Unmanaged vs. Managed

- Managed switches can be configured
- Unmanaged switches have no configuration options

Modular vs. Fixed

- Modular can be configured with different numbers and types of ports
- Fixed come with a set number of ports

Desktop vs. Rack

- Desktop switches are free standing
- Rack-mounted switches are designed fit into networking racks

Stackable

- Can be connected together
- Can be managed as a single unit

Copyright © 2024 The Computing Technology Industry Association, Inc. All rights reserved.

Activity: Matching

Hub

Switch

Bridge

Improves network efficiency by dividing it into smaller, manageable sections

Copyright © 2024 The Computing Technology Industry Association, Inc. All rights reserved.

Activity: Matching

Hub

Switch

Bridge

Operates by creating a single shared communication path between multiple devices in a network

Copyright © 2024 The Computing Technology Industry Association, Inc. All rights reserved.

Activity: Matching

Hub

Switch

Bridge

Intelligently directs data to a specific port based on MAC addresses, reducing network congestion

Copyright © 2024 The Computing Technology Industry Association, Inc. All rights reserved.

Activity: Matching

Hub

Switch

Bridge

Operates primarily at the physical layer

Copyright © 2024 The Computing Technology Industry Association, Inc. All rights reserved.

Activity: Matching

Hub

Switch

Bridge

Learns the MAC addresses of devices connected to it and uses this information to forward data only to the intended recipient

Copyright © 2024 The Computing Technology Industry Association, Inc. All rights reserved.

Lesson 3.3

Switch Port Configuration

Copyright © 2024 The Computing Technology Industry Association, Inc. All rights reserved.

Link Aggregation/NIC Teaming

Link aggregation

- Combining 2+ separate cabled links into a single logical channel
- Provides redundancy
- Cost effective

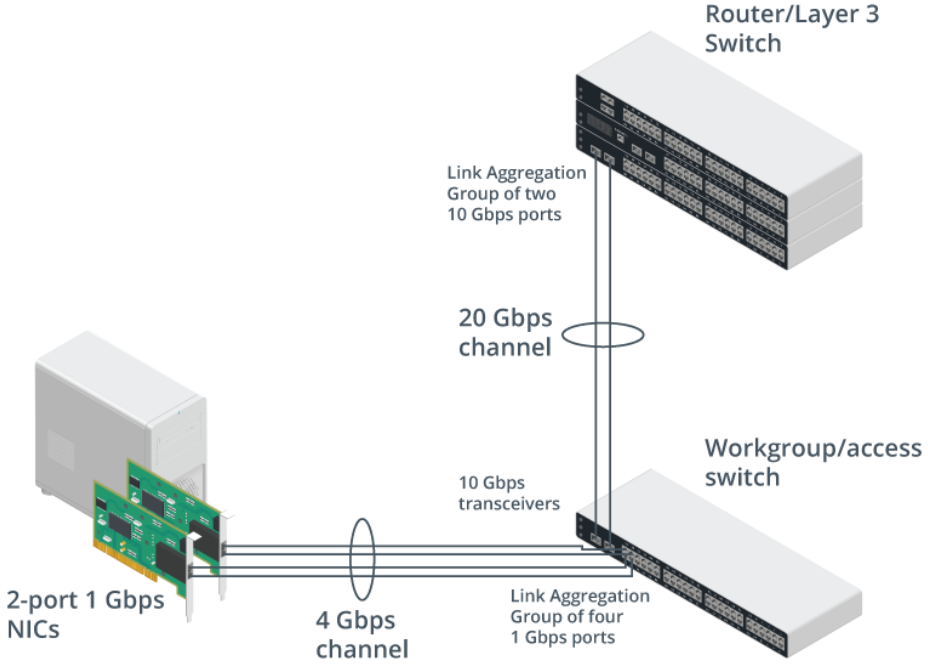

Copyright © 2024 The Computing Technology Industry Association, Inc. All rights reserved.

Maximum Transmission Unit

Standard ethernet frame

- Maximum transmission unit (MTU) is 1,500 bytes

Jumbo frame

- Supports payload up to 9.216 bytes
- Reduces the number of frames transmitted
- Limited because they break Ethernet standards

Copyright © 2024 The Computing Technology Industry Association, Inc. All rights reserved.

Spanning Tree Protocol

Spanning Tree Protocol (STP)

- Layer 2 protocol
- Prevents bridge loops
- Provides fault tolerance

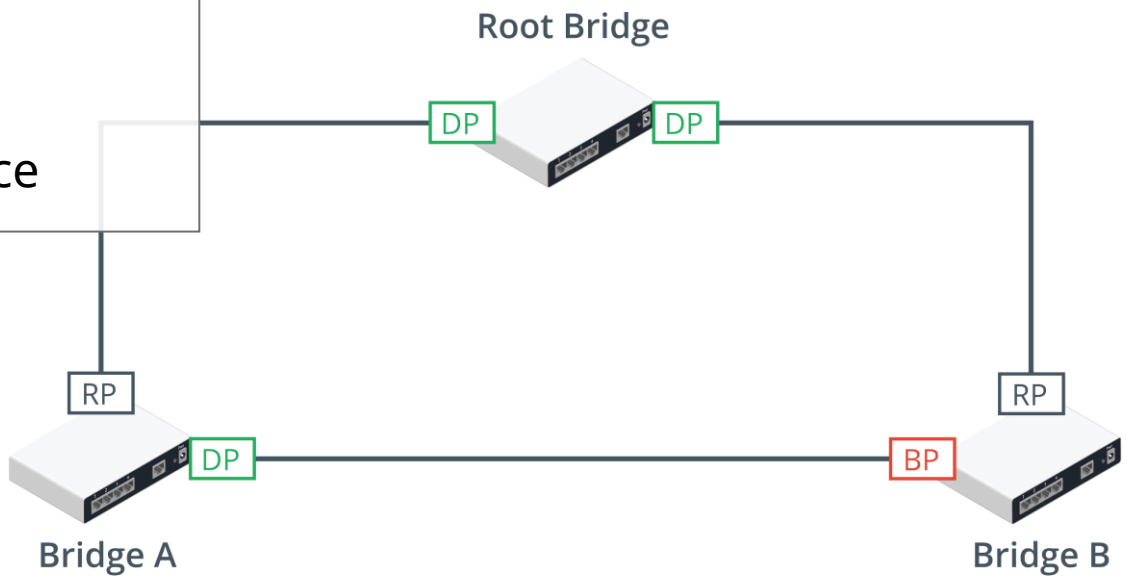

Copyright © 2024 The Computing Technology Industry Association, Inc. All rights reserved.

Power Over Ethernet

Power over Ethernet (PoE)

- Allows 1 cable to transmit both data and power to networked devices
- Simplifies network installation and expansion

Copyright © 2024 The Computing Technology Industry Association, Inc. All rights reserved.

Activity: Scavenger Hunt

Find devices that use Power over Ethernet (PoE).

- Explore to find any devices that might be powered through an Ethernet cable.
- Note the device type, device location, and how it benefits from PoE

Copyright © 2024 The Computing Technology Industry Association, Inc. All rights reserved.

Lesson 3.4

Switch Troubleshooting

Copyright © 2024 The Computing Technology Industry Association, Inc. All rights reserved.

Hardware Failure Issues

Hardware Failure Issue	Troubleshooting and Mitigation Steps
Power issues	• Verify stable power supply • Install UPS and secondary power sources
Network adapters	• Check for damaged ports or connectors • Test with alternative adapter if possible • Update or reinstall drivers
Switches/routers/modems	• Visually inspect for damage • Inspect indicator lights • Verify power supply and cabling connections • Restart the device following proper protocols
Overheating	• Check for proper ventilation around the device • Clean dust from intake or exhaust vents • Ensure cooling systems are operational

Copyright © 2024 The Computing Technology Industry Association, Inc. All rights reserved.

Port Status Indicators

	Solid green	The link is connected, but there is no traffic
	Flickering green	The link is operating normally (with traffic). The blink rate indicates the link speed
	No light	The link is not working, or the port is shut down
	Solid amber	The port is blocked by the spanning tree algorithm
	Blinking amber	A fault has been detected

Copyright © 2024 The Computing Technology Industry Association, Inc. All rights reserved.

Switch Show Commands

Show config	• Device's current configuration
Show startup-config	• Configuration device will use upon the next restart
Show running-config	• Active configuration currently used by the device
Show interface	• Detailed information about the device's network interfaces

Copyright © 2024 The Computing Technology Industry Association, Inc. All rights reserved.

Switch Show Command Status

Down/down	Both the layer 1 (physical) and layer 2 (data link) connections are inactive.
Administratively down/down	The interface has been manually disabled by an administrator using the **shutdown** command
Down/error disabled	The interface has been automatically disabled due to a network error or policy violation
Up/down (suspended)	The physical layer is operational, but the data link layer is inactive due to administrative settings or errors

Copyright © 2024 The Computing Technology Industry Association, Inc. All rights reserved.

Interface Error Counters

Link state

- Checks if interface is up or down
- Immediate alert for downtime

Resets

- Count of manual and automatic restarts
- High frequency of resets should be monitored

Discards/drops

- Causes by checksum errors, mismatched MTUs, size anomalies, high load, ACL or VLAN configuration errors
- Used for troubleshooting

Copyright © 2024 The Computing Technology Industry Association, Inc. All rights reserved.

Common Interface Errors

Cyclic Redundancy Check (CRC) Errors

- Frame's calculated checksum does not match the transmitted checksum
- Indicative of noise, interference, or equipment malfunctions

Runt Frame Errors

- Frames are smaller than the minimum frame size.
- Results from collisions or damaged hardware.

Giant Frame Errors

- Frames exceed the maximum allowed size.
- Caused by misconfiguration or malfunctioning network devices

Copyright © 2024 The Computing Technology Industry Association, Inc. All rights reserved.

Network Loop and Broadcast Storm

Network Loops: Causes	Network Loops: Solutions	Broadcast Storms: Causes	Broadcast Storms: Solutions
• Redundant connections • End-device side	• Proper redundant connection configuration • Implement spanning tree protocol (STP) • Educate users	• DHCP issues • Very large broadcast domains	• Monitor DHCP traffic • Segment the network

Copyright © 2024 The Computing Technology Industry Association, Inc. All rights reserved.

Power Over Ethernet Issues

Cabling Considerations	Standard Compatibility	Power Budget Management
• Must use Cat 5e or better, recommend Cat 6A • Importance of conductor thickness (23 AWG > 24 AWG for better performance) • Shielded cabling helps disperse heat efficiently	• Devices must negotiate the correct PoE mode (Alternative A, B, or Four-pair) • Challenges with devices only supporting the first PoE standard	• Switches have a limited power budget (300–400W) • Use "show power inline" command for monitoring

Copyright © 2024 The Computing Technology Industry Association, Inc. All rights reserved.

Activity: What Would You Do?

The switch won’t power on.

What troubleshooting steps would you take?

Copyright © 2024 The Computing Technology Industry Association, Inc. All rights reserved.

Summary

- **NIC vs. Transceiver**: NIC connects host to network (cable), transceiver adapts cable types
- **Hub vs. Switch**: Hub broadcasts to all devices, switch directs traffic to specific devices; bridge connects networks, keeps them logically unified
- **STP**: Prevents bridge loops and ensures network redundancy (Layer 2 protocol)

Copyright © 2024 The Computing Technology Industry Association, Inc. All rights reserved.